CVB VALVES S.R.L.

Top quality Check valves for Oil and Gas / Naval / Petrochemical Water / Energy Market

www.cvbvalves.com

APPLICABLE STANDARDS

Design:
API 6D/ BS 1868/ ANSI B 16-34
Face to face:
ANSI B 16.10
Flange:
B16.5/ B16.47
Bw ends:
ANSI B 16.25
Testing:
API 598 / BS EN ISO 12266 Part 1

MATERIALS

Carbon Steel
Stainless Steel
Alloy Steel
Duplex - SuperDuplex
Monel
Aluminium bronze
Titanium
Hastelloy
Inconel
Austenitic Steel

CORE FEATURES

Bolted bonnet
Renewable seats
Swing type disc

SPECIAL EXECUTION

Available upon request
External shaft for actuator/gear coupling

STANDARD MATERIAL

ITEM	PARTS	STD. CARBON STEEL	HIGH TEMP CARBON STEEL	LOW TEMP CARBON STEEL	STAINLESS STEEL
1	BODY	ASTM A216 WCB	ASTM A217 WC6/ WC9/C5/C12	ASTM A352 LCB/ LCC/LC3	ASTM A351 CF3/ CF8/CF3M/CF8M
2	COVER	ASTM A 105			
3	HINGE				
4	DISC	ACCORDING TO API 600 TRIM NUMBER			
5	SEAT RING				
6	HINGE PIN				
7	PLUG	A182 F304L / A182 F316L			
8	GASKET	SPIRAL WOUND REINFORCED GRAPHITE / PTFE			
9	BONNET STUD BOLTS/NUTS	A193 B7 A194 2H	A193 B16 A194 Gr4	A320 L7 A320 Gr7	A193 B8 A194 Gr8

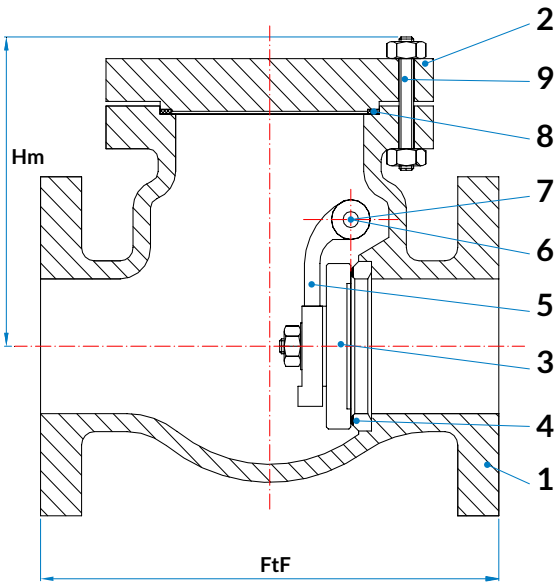

DIMENSIONS

Size	2”	3”	4”	6”	8”	10”	12”	14”	16”	18”	20”	24”	26”	30”	36”
FtF-RF/BW	203	241	292	356	495	622	698	787	864	978	978	1296	1296	1524	on request
FtF-RTJ	216	254	305	369	508	635	711	800	877	991	991	1309	1309	1537	
Hm	150	180	195	245	305	370	400	435	490	520	560	650	700	1080	

Some measures [mm] are indicative and might be subjected to changes

APPLICABLE STANDARDS

Design:
API 6D/ BS 1868/ ANSI B 16-34
Face to face:
ANSI B 16.10
Flange:
B16.5/ B16.47
Bw ends:
ANSI B 16.25
Testing:
API 598 / BS EN ISO 12266 Part 1

MATERIALS

Carbon Steel
Stainless Steel
Alloy Steel
Duplex - SuperDuplex
Monel
Aluminium bronze
Titanium
Hastelloy
Inconel
Austenitic Steel

CORE FEATURES

Bolted bonnet
Renewable seats
Swing type disc

SPECIAL EXECUTION

Available upon request
External shaft for actuator/gear coupling

STANDARD MATERIAL

ITEM	PARTS	STD. CARBON STEEL	HIGH TEMP CARBON STEEL	LOW TEMP CARBON STEEL	STAINLESS STEEL
1	BODY	ASTM A216 WCB	ASTM A217 WC6/ WC9/C5/C12	ASTM A352 LCB/ LCC/LC3	ASTM A351 CF3/ CF8/CF3M/CF8M
2	COVER	ASTM A 105			
3	HINGE				
4	DISC	ACCORDING TO API 600 TRIM NUMBER			
5	SEAT RING				
6	HINGE PIN				
7	PLUG	A182 F304L / A182 F316L			
8	GASKET	SPIRAL WOUND REINFORCED GRAPHITE / PTFE			
9	BONNET STUD BOLTS/NUTS	A193 B7 A194 2H	A193 B16 A194 Gr4	A320 L7 A320 Gr7	A193 B8 A194 Gr8

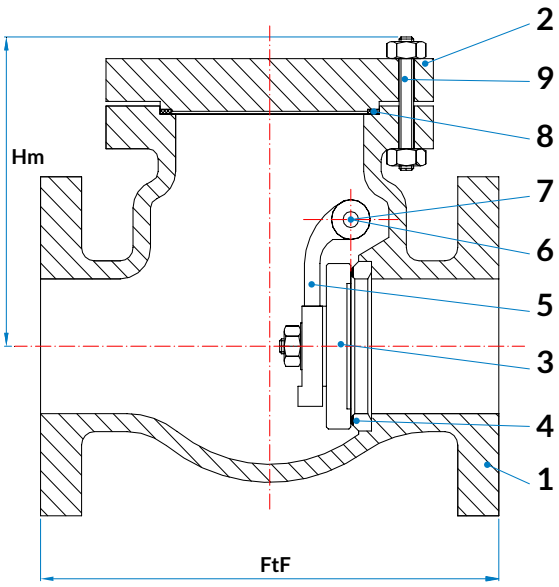

DIMENSIONS

Size	2”	3”	4”	6”	8”	10”	12”	14”	16”	18”	20”	24”	28”	32”	36”
FtF-RF/BW	267	318	356	444	533	622	711	838	864	978	1016	1346	on request		
FtF-RTJ	283	334	372	460	549	638	727	854	880	994	1035	1368			
Hm	170	200	230	280	360	400	460	490	540	590	620	860			

Some measures [mm] are indicative and might be subjected to changes

APPLICABLE STANDARDS

Design:
API 6D/ BS 1868/ ANSI B 16-34
Face to face:
ANSI B 16.10
Flange:
B16.5/ B16.47
Bw ends:
ANSI B 16.25
Testing:
API 598 / BS EN ISO 12266 Part 1

MATERIALS

Carbon Steel
Stainless Steel
Alloy Steel
Duplex - SuperDuplex
Monel
Aluminium bronze
Titanium
Hastelloy
Inconel
Austenitic Steel

CORE FEATURES

Bolted bonnet
Renewable seats
Swing type disc

SPECIAL EXECUTION

Available upon request
External shaft for actuator/gear coupling

STANDARD MATERIAL

ITEM	PARTS	STD. CARBON STEEL	HIGH TEMP CARBON STEEL	LOW TEMP CARBON STEEL	STAINLESS STEEL
1	BODY	ASTM A216 WCB	ASTM A217 WC6/ WC9/C5/C12	ASTM A352 LCB/ LCC/LC3	ASTM A351 CF3/ CF8/CF3M/CF8M
2	COVER	ASTM A 105			
3	HINGE				
4	DISC	ACCORDING TO API 600 TRIM NUMBER			
5	SEAT RING				
6	HINGE PIN				
7	PLUG	A182 F304L / A182 F316L			
8	GASKET	SPIRAL WOUND REINFORCED GRAPHITE / PTFE			
9	BONNET STUD BOLTS/NUTS	A193 B7 A194 2H	A193 B16 A194 Gr4	A320 L7 A320 Gr7	A193 B8 A194 Gr8

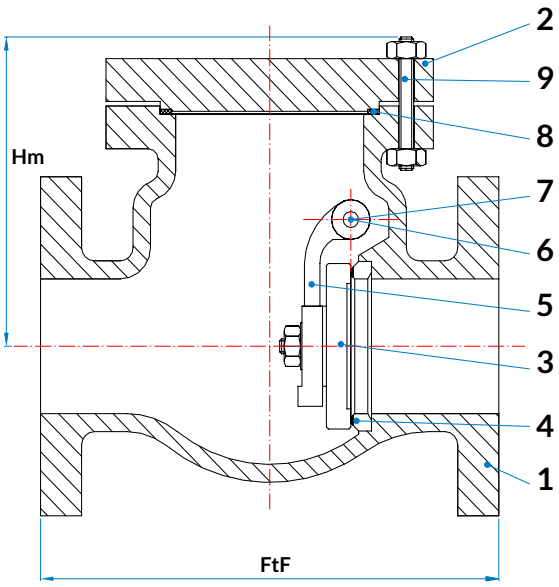

DIMENSIONS

Size	2”	3”	4”	6”	8”	10”	12”	14”	16”	18”	20”	24”	30”	32”	36”
FtF-RF/BW	292	356	432	559	660	787	838	889	991	1092	1194	1397	1651	on request	
FtF-RTJ	295	359	435	562	663	790	841	892	994	1095	1200	1407	1664		
Hm	180	220	260	325	400	460	540	610	610	740	670	910	1100		

Some measures [mm] are indicative and might be subjected to changes

APPLICABLE STANDARDS

Design:
API 6D/ BS 1868/ ANSI B 16-34
Face to face:
ANSI B 16.10
Flange:
B16.5/ B16.47
Bw ends:
ANSI B 16.25
Testing:
API 598 / BS EN ISO 12266 Part 1

MATERIALS

Carbon Steel
Stainless Steel
Alloy Steel
Duplex - SuperDuplex
Monel
Aluminium bronze
Titanium
Hastelloy
Inconel
Austenitic Steel

CORE FEATURES

Bolted bonnet
Renewable seats
Swing type disc

SPECIAL EXECUTION

Available upon request
External shaft for actuator/gear coupling

STANDARD MATERIAL

ITEM	PARTS	STD. CARBON STEEL	HIGH TEMP CARBON STEEL	LOW TEMP CARBON STEEL	STAINLESS STEEL
1	BODY	ASTM A216 WCB	ASTM A217 WC6/ WC9/C5/C12	ASTM A352 LCB/ LCC/LC3	ASTM A351 CF3/ CF8/CF3M/CF8M
2	COVER	ASTM A 105			
3	HINGE				
4	DISC	ACCORDING TO API 600 TRIM NUMBER			
5	SEAT RING				
6	HINGE PIN				
7	PLUG	A182 F304L / A182 F316L			
8	GASKET	SPIRAL WOUND REINFORCED GRAPHITE / PTFE			
9	BONNET STUD BOLTS/NUTS	A193 B7 A194 2H	A193 B16 A194 Gr4	A320 L7 A320 Gr7	A193 B8 A194 Gr8

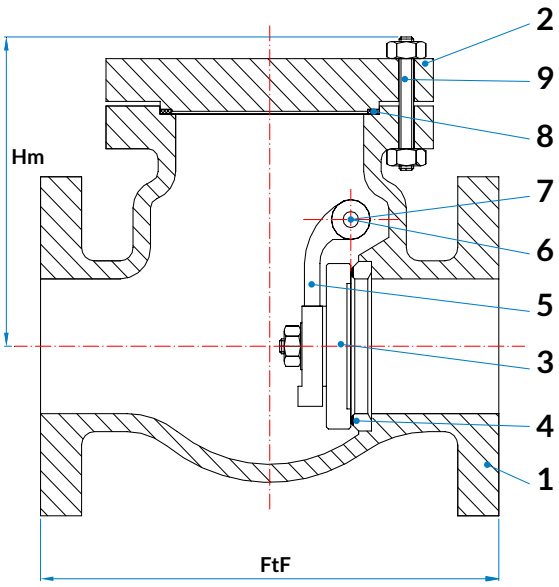

DIMENSIONS

Size	2"	3"	4"	6"	8"	10"	12"	14"	16"	18"	20"	24"	28"	32"	36"
FtF-RF/BW	Use class 1500	381	457	610	737	838	965	1029	1130	1219	1321	1549	on request		
FtF-RTJ		384	460	613	740	841	968	1039	1140	1232	1334	1568			
Hm		255	300	370	450	515	630	700	730	800	820	1000			

Some measures [mm] are indicative and might be subjected to changes

APPLICABLE STANDARDS

Design:
API 6D/ BS 1868/ ANSI B 16-34
Face to face:
ANSI B 16.10
Flange:
B16.5/ B16.47
Bw ends:
ANSI B 16.25
Testing:
API 598 / BS EN ISO 12266 Part 1

MATERIALS

Carbon Steel
Stainless Steel
Alloy Steel
Duplex - SuperDuplex
Monel
Aluminium bronze
Titanium
Hastelloy
Inconel
Austenitic Steel

CORE FEATURES

Bolted bonnet
Renewable seats
Swing type disc

SPECIAL EXECUTION

Available upon request
External shaft for actuator/gear coupling

STANDARD MATERIAL

ITEM	PARTS	STD. CARBON STEEL	HIGH TEMP CARBON STEEL	LOW TEMP CARBON STEEL	STAINLESS STEEL
1	BODY	ASTM A216 WCB	ASTM A217 WC6/ WC9/C5/C12	ASTM A352 LCB/ LCC/LC3	ASTM A351 CF3/ CF8/CF3M/CF8M
2	COVER	ASTM A 105			
3	HINGE				
4	DISC	ACCORDING TO API 600 TRIM NUMBER			
5	SEAT RING				
6	HINGE PIN				
7	PLUG	A182 F304L / A182 F316L			
8	GASKET	SPIRAL WOUND REINFORCED GRAPHITE / PTFE			
9	BONNET STUD BOLTS/NUTS	A193 B7 A194 2H	A193 B16 A194 Gr4	A320 L7 A320 Gr7	A193 B8 A194 Gr8

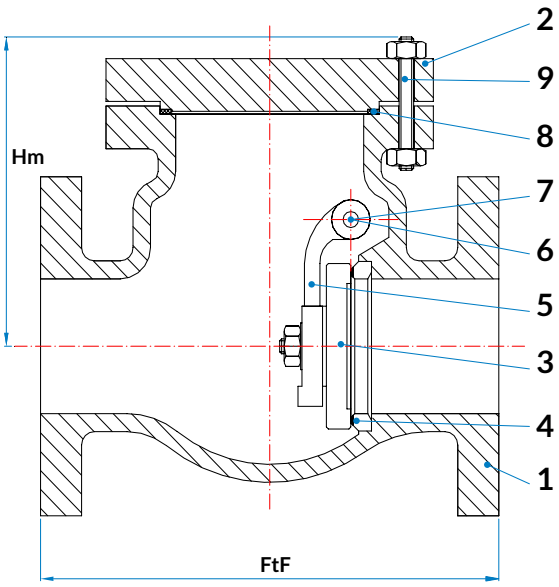

DIMENSIONS

Size	2”	3”	4”	6”	8”	10”	12”	14”	16”	18”	20”	24”	28”	32”	36”
FtF-RF/BW	368	470	546	705	832	991	1130	1257	on request						
FtF-RTJ	371	473	549	711	842	1000	1146	1276							
Hm	240	300	340	475	525	640	760	820							

Some measures [mm] are indicative and might be subjected to changes

APPLICABLE STANDARDS

Design:
API 6D/ BS 1868/ ANSI B 16-34
Face to face:
ANSI B 16.10
Flange:
B16.5/ B16.47
Bw ends:
ANSI B 16.25
Testing:
API 598 / BS EN ISO 12266 Part 1

MATERIALS

Carbon Steel
Stainless Steel
Alloy Steel
Duplex - SuperDuplex
Monel
Aluminium bronze
Titanium
Hastelloy
Inconel
Austenitic Steel

CORE FEATURES

Bolted bonnet
Renewable seats
Swing type disc

SPECIAL EXECUTION

Available upon request
External shaft for actuator/gear coupling

STANDARD MATERIAL

ITEM	PARTS	STD. CARBON STEEL	HIGH TEMP CARBON STEEL	LOW TEMP CARBON STEEL	STAINLESS STEEL
1	BODY	ASTM A216 WCB	ASTM A217 WC6/ WC9/C5/C12	ASTM A352 LCB/ LCC/LC3	ASTM A351 CF3/ CF8/CF3M/CF8M
2	COVER	ASTM A 105			
3	HINGE				
4	DISC	ACCORDING TO API 600 TRIM NUMBER			
5	SEAT RING				
6	HINGE PIN				
7	PLUG	A182 F304L / A182 F316L			
8	GASKET	SPIRAL WOUND REINFORCED GRAPHITE / PTFE			
9	BONNET STUD BOLTS/NUTS	A193 B7 A194 2H	A193 B16 A194 Gr4	A320 L7 A320 Gr7	A193 B8 A194 Gr8

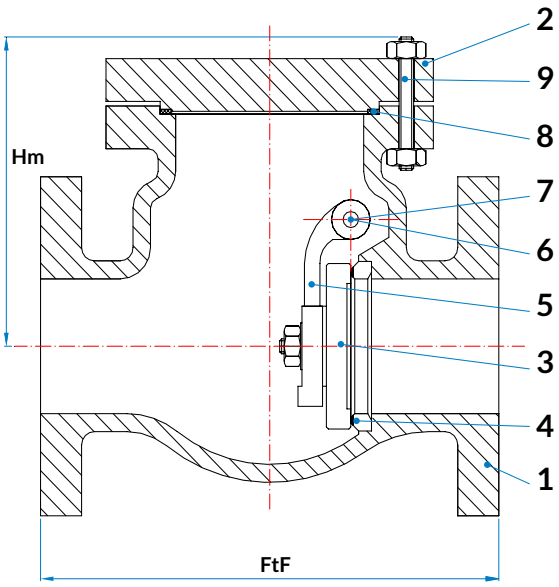

DIMENSIONS

Size	2”	3”	4”	6”	8”	10”	12”	14”	16”	18”	20”	24”	28”	32”	36”
FtF-RF/BW	451	578	673	914	1022	1270	1422	on request							
FtF-RTJ	454	584	683	927	1038	1293	1444								
Hm	280	360	420	560	700	810	920								

Some measures [mm] are indicative and might be subjected to changes

CVB VALVES S.R.L.

We strive to guarantee Excellence. We are completely aware of our responsibility towards our employees, suppliers, customers, and community, to provide a safe and healthy work environment, and to avoid injuries to people and damages to assets and the environment. We fully comply with the HSE local standards and international laws and regulations. Our HSE management provides unceasing performance improvements, sets highly challenging Quality Goals & Targets, with the aim to achieve excellence.

via Industria, 24
20200 Arconate
(MI) - ITALY

(+39) 0331 461737
www.cvbvalves.com
sales@cvbvalves.com